SERAPHIM®

SHIFTING · THE FUTURE
www.seraphim-energy.com

SIV SERIES

Small Changes, Big Accomplishments

525-540w



SIV SERIES

Seraphim redefined the high-efficiency module series by integrating 182mm silicon wafers with multi-busbar and half-cut cell technologies. Seraphim panel combined creative technology effectively and extremely improved the module efficiency and power output.

KEY FEATURES

- Less mismatch to get more power
- Less power loss by minimizing the shading impact
- Competitive low light performance
- 3 times EL test to ensure best quality
- Ideal choice for utility and commercial scale projects by reduced BOS and improve ROI
- PVEL Outstanding reliability proven by PVEL for stringent environment condition :
  - Sand, acid, salt and hail stones
  - 2400pa wind load and 5400pa snow load
  - Anti-PID

QUALITY SYSTEM

ISO19001 / ISO14001 / OHSAS18001

PRODUCT CERTIFICATION

TÜV | CE | PV CYCLE | CLEAN ENERGY COUNCIL MEMBER

INSURANCE

PICC

WARRANTY

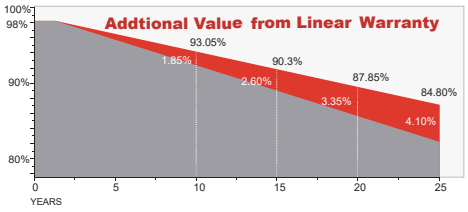

15 YEARS Guarantee on product material and workmanship

25 YEARS linear power output warranty

JIANGSU SERAPHIM SOLAR SYSTEM CO., LTD

Add: No.10, TongshunRd, HenglinTown, Wujin District, 213000, Changzhou, China
Tel: +86-519-69699879 Email: info@seraphim-energy.com

SERAPHIM®

SHIFTING • THE FUTURE
www.seraphim-energy.com

Electrical Characteristics

Module Type	SRP-525-BMA-HV	SRP-530-BMA-HV	SRP-535-BMA-HV	SRP-540-BMA-HV
	STC	STC	STC	STC
Maximum Power at STC (Pmp)	525	530	535	540
Open Circuit Voltage (Voc)	49.20	49.33	49.40	49.50
Short Circuit Current (Isc)	13.50	13.60	13.70	13.81
Maximum Power Voltage (Vmp)	40.78	41.03	41.29	41.55
Maximum Power Current (Imp)	12.88	12.92	12.96	13.00
Module Efficiency at STC(ηm)	20.54	20.74	20.93	21.13
Power Tolerance	(0,+3%)			
Maximum System Voltage	1500V DC			
Maximum Series Fuse Rating	25 A			

STC: Irradiance 1000 W/m² module temperature 25°C AM=1.5
Power measurement tolerance: +/-3%

Temperature Characteristics

Pmax Temperature Coefficient	-0.35 %/°C
Voc Temperature Coefficient	-0.27 %/°C
Isc Temperature Coefficient	+0.05 %/°C
Operating Temperature	-40～+85 °C
Nominal Operating Cell Temperature (NOCT)	45 ± 2 °C

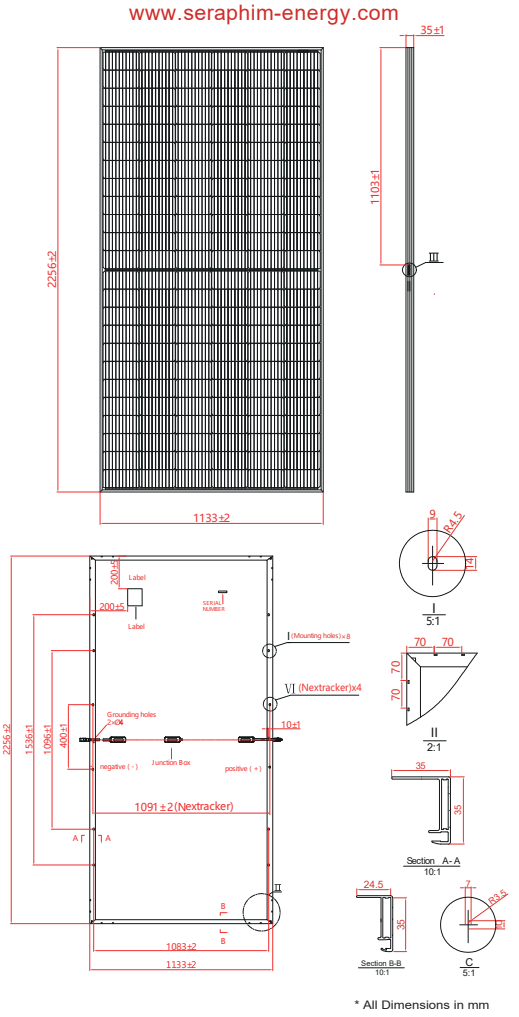

Mechanical Specifications

External Dimensions	2256 x 1133 x 35 mm
Weight	26.5 kg
Solar Cells	PERC Mono (144 pcs)
Front Glass	3.2 mm AR coating tempered glass, low iron
Frame	Anodized aluminum alloy
Junction Box	IP68,3 diodes
Output Cables	4.0 mm², 250mm(+)/350mm(-) or Customized Length
Mechanical Load	Front side 5400Pa / Rear side 2400Pa

I-V Curve

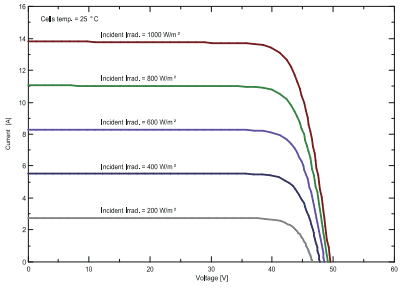

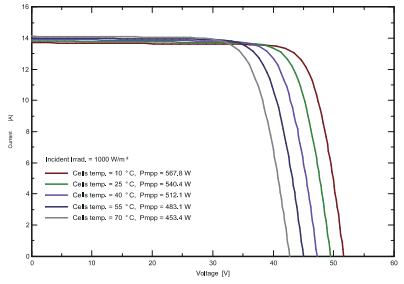

Packing Configuration

	2256x 1133 x 35 mm	
Container	20'GP	40'HQ
Pieces per Pallet	31+4*	31
Pallets per Container	5	20
Pieces per Container	175	620

** 31+4 pieces per pallet is the special package which only suits for container transport*

For details,please consult SERAPHIM

Specifications are subject to change without further notification SRP-DS-EN-2021V1.0 © Copyright 2021 Seraphim

JIANGSU SERAPHIM SOLAR SYSTEM CO., LTD
Add: No.10, TongshunRd, HenglinTown, Wujin District, 213000, Changzhou, China
Tel: +86-519-69699879 Email: info@seraphim-energy.com